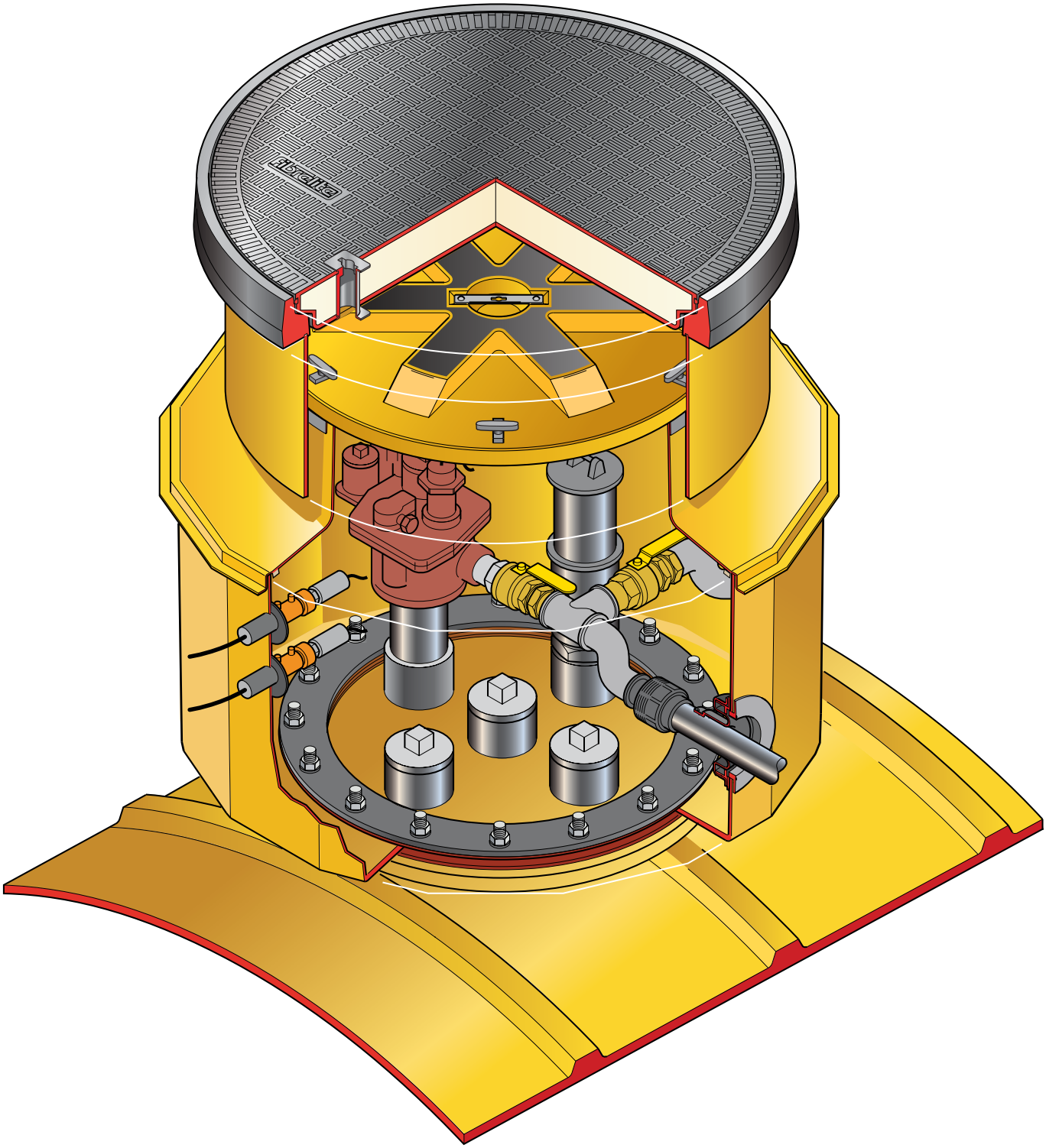

1.2m diameter solid base chamber with a sealed corbel, watertight platform, adjustable skirt, and round 900mm flat sealed cover.

For reference purposes only. This drawing is not a specification. Order against product code only. To enable continuous improvement of our products, the designs and specifications are subject to change without notice.

FIBRELITE
PART OF OPW A DOVER COMPANY

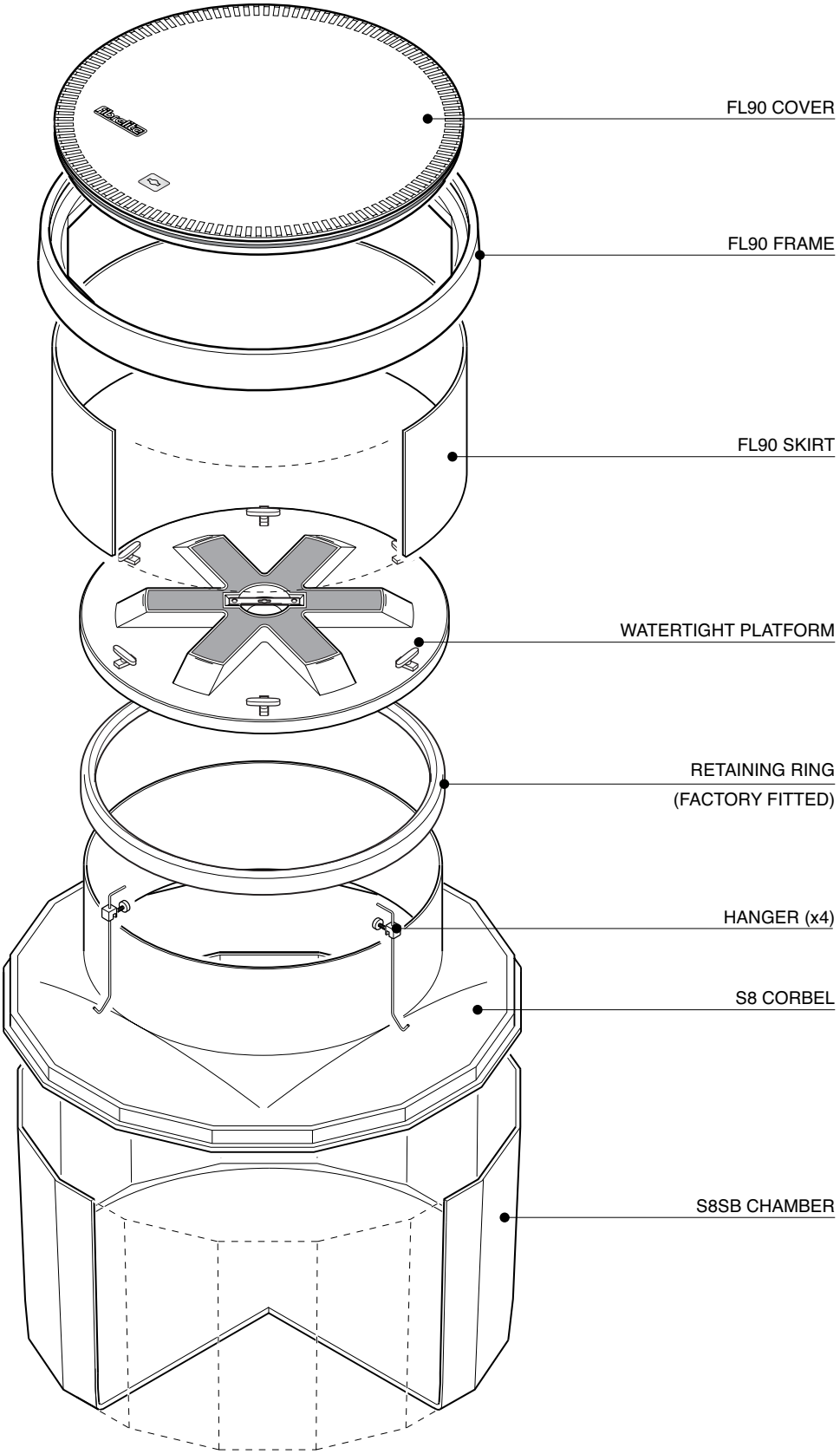

1.2m diameter solid base chamber with a sealed corbel, watertight platform, adjustable skirt, and round 900mm flat sealed cover.

For reference purposes only. This drawing is not a specification. Order against product code only. To enable continuous improvement of our products, the designs and specifications are subject to change without notice.

FIBRELITE
PART OF OPW A DOVER COMPANY

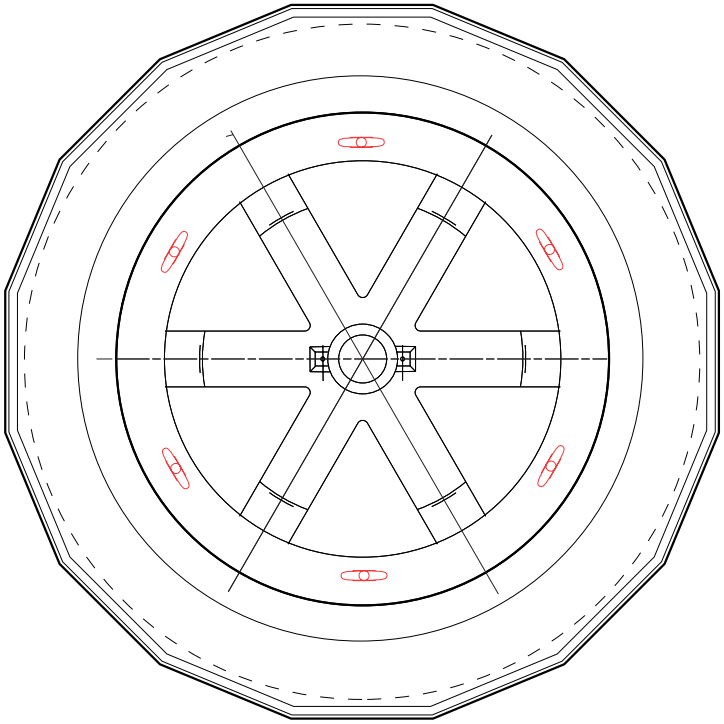

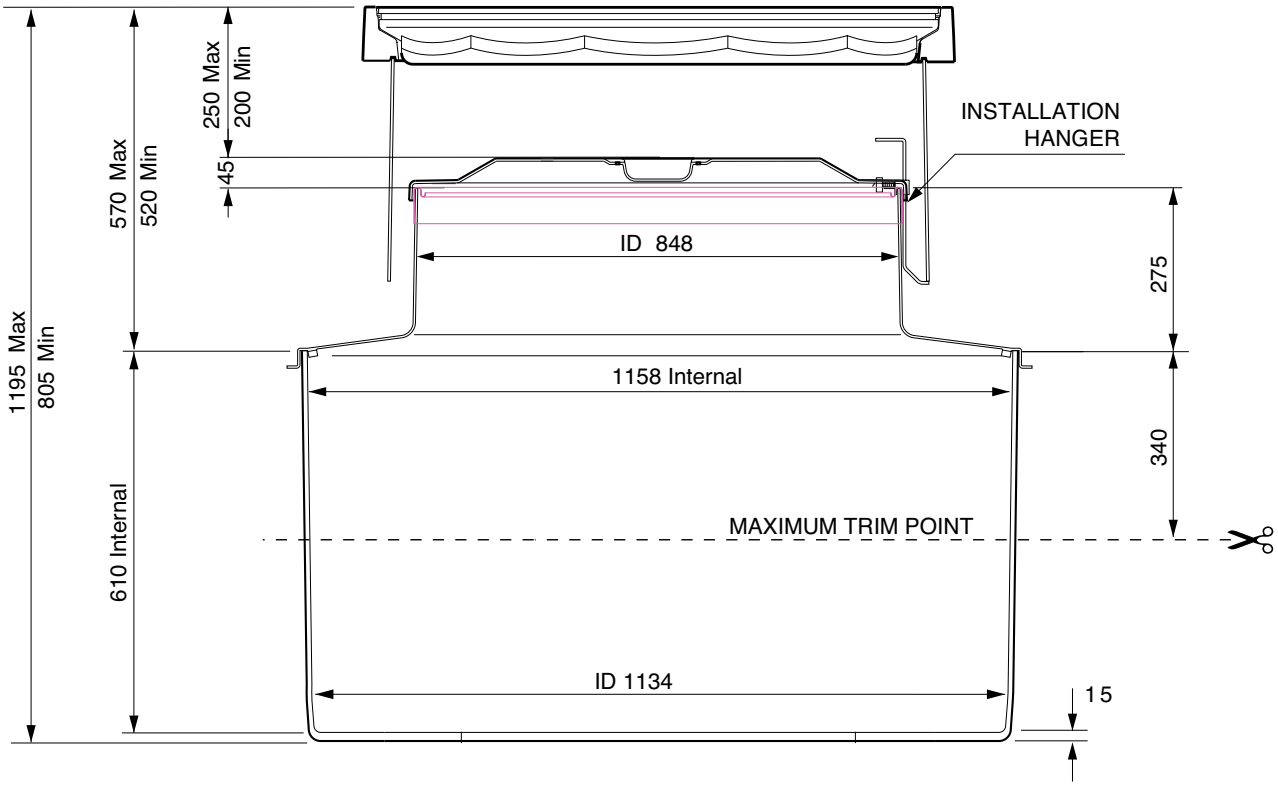

1.2m diameter solid base chamber with a sealed corbel, watertight platform, adjustable skirt, and round 900mm flat sealed cover.

For reference purposes only. This drawing is not a specification. Order against product code only. To enable continuous improvement of our products, the designs and specifications are subject to change without notice.

FIBRELITE
PART OF OPW A DOVER COMPANY

VERY IMPORTANT
OUTER EDGE "A" OF FRAME SET 25 ABOVE GENERAL GRADE AREA WITH CONCRETE RAMPED AWAY OVER 450mm.

TYPICAL INSTALLATION

CONCRETE

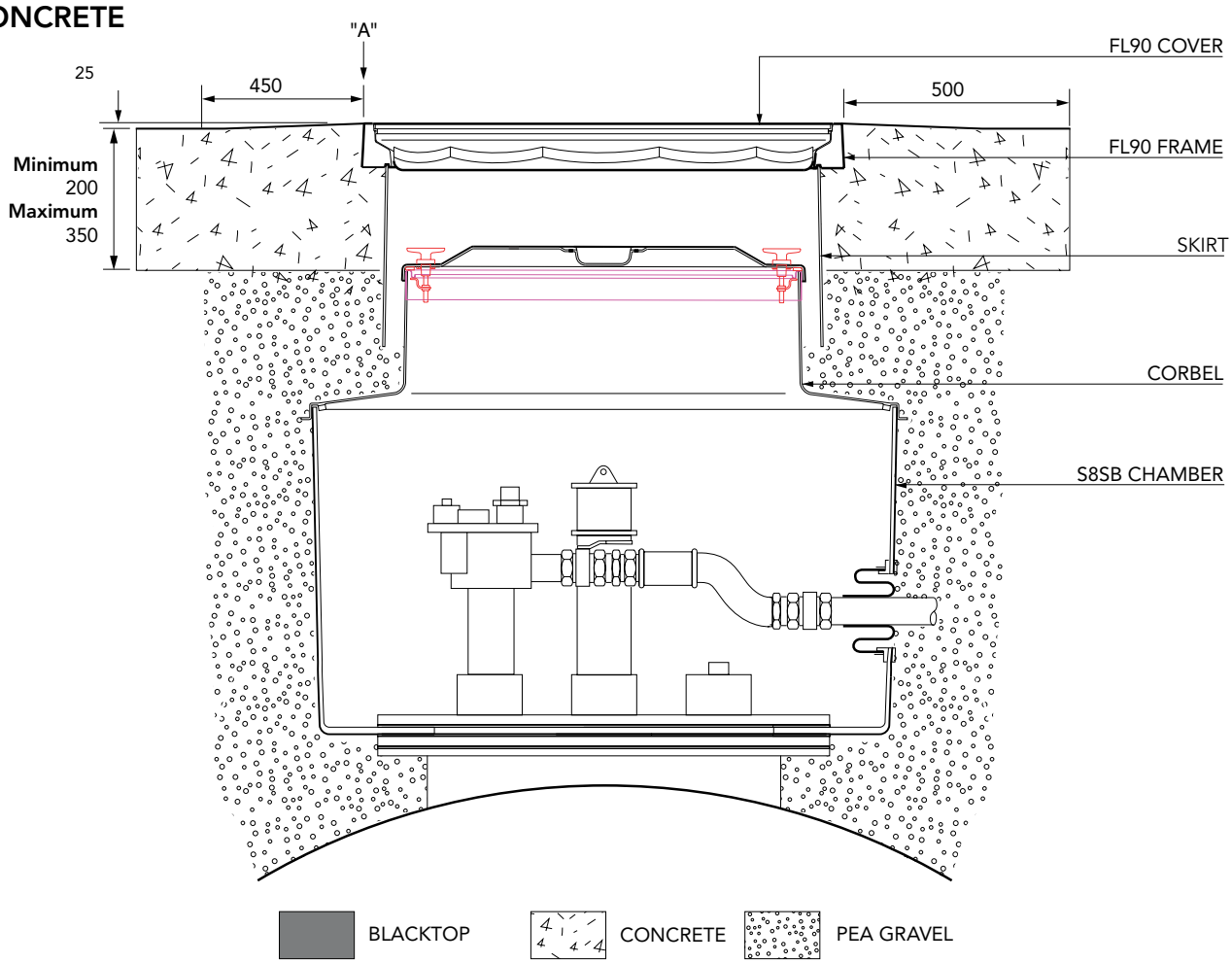

ALTERNATIVE INSTALLATION ADVICE

BLACKTOP

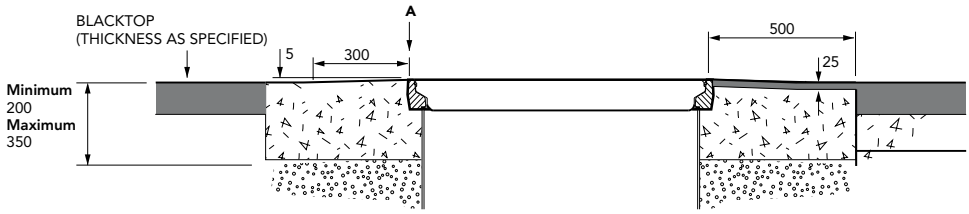

1.2m diameter solid base chamber with a sealed corbel, watertight platform, adjustable skirt, and round 900mm flat sealed cover.

For reference purposes only. This drawing is not a specification. Order against product code only. To enable continuous improvement of our products, the designs and specifications are subject to change without notice.

FIBRELITE
PART OF OPW A DOVER COMPANY